806

1280 x 450 x 1730 mm

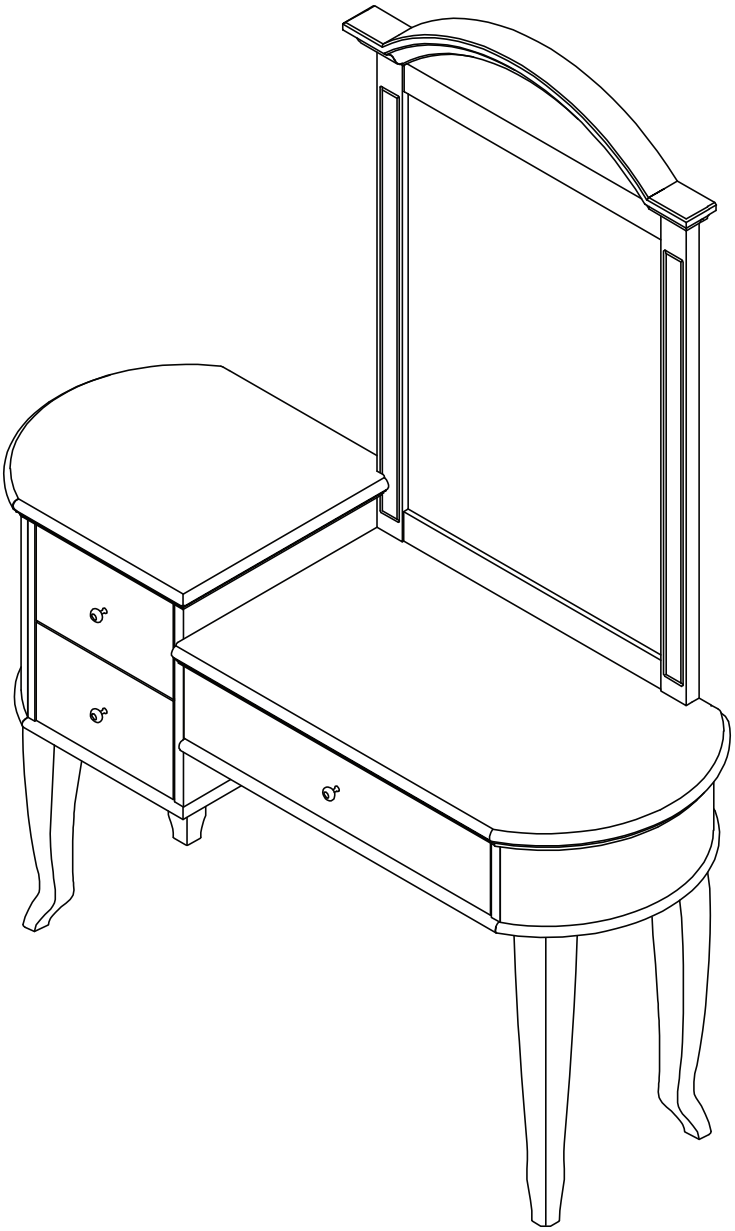

BEMONDI

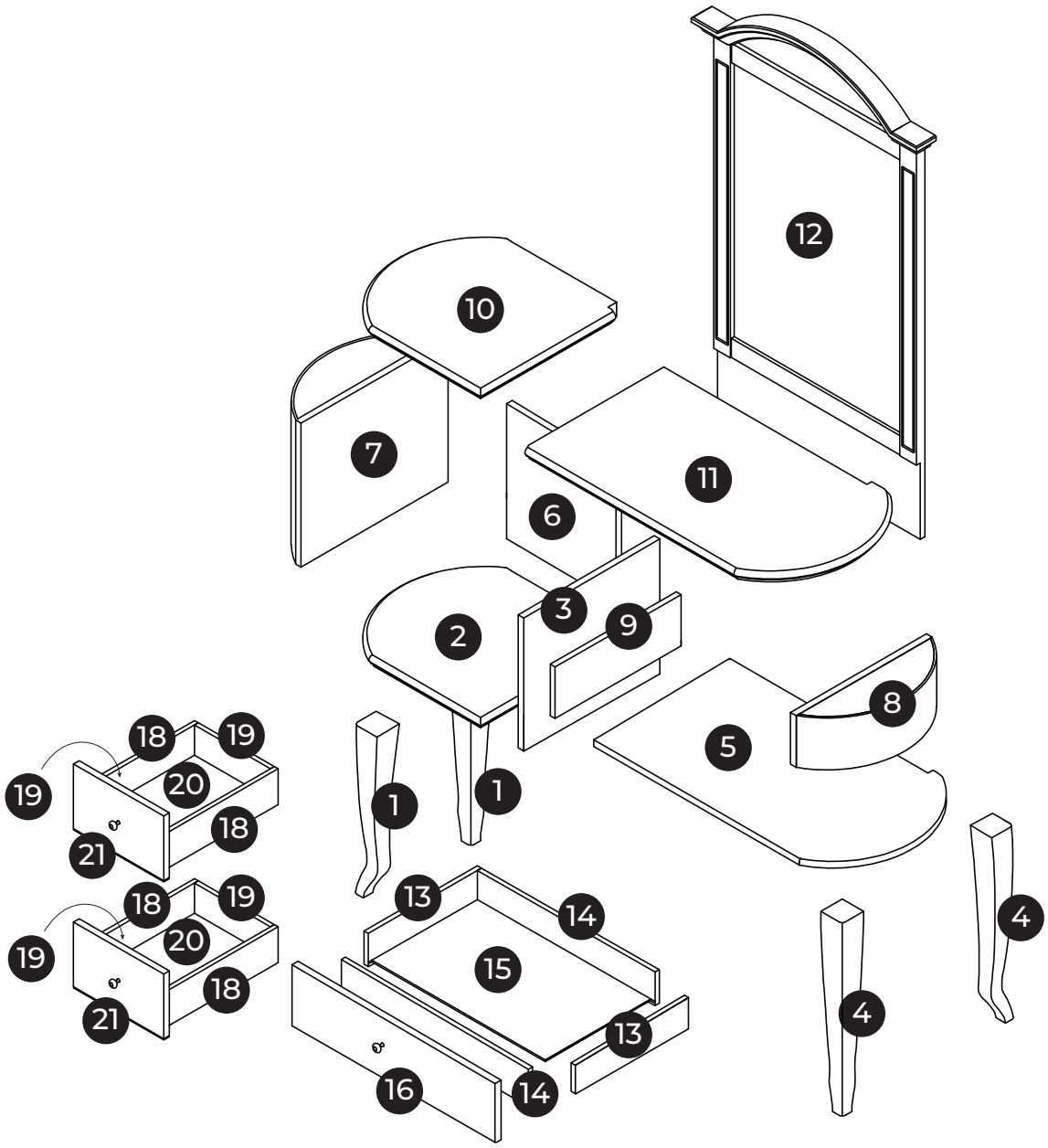

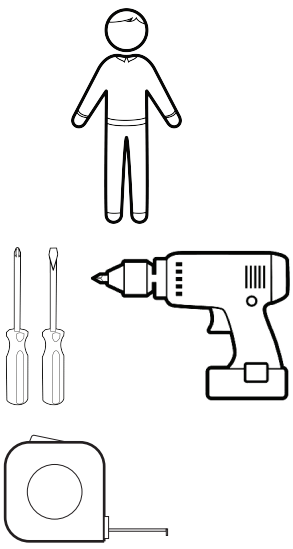

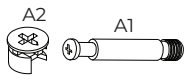

A x22
⌀ 15 mm

B x12
⌀ 8 x 30 mm

C x12
⌀ 3,5 x 12 mm

D x3
⌀ 4 x 20mm

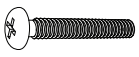

E x4
⌀ 6 x 45 mm

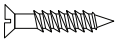

F x24
⌀ 3,5 x 30 mm

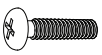

G x6
⌀ 6 x 20 mm

H x12
⌀ 3,5 x 15 mm

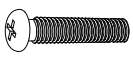

I x8
⌀ 8 x 40 mm

J x3

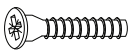

K x8
⌀ 7 x 38 mm

L x4

M x4

S x6
300 x 35 mm

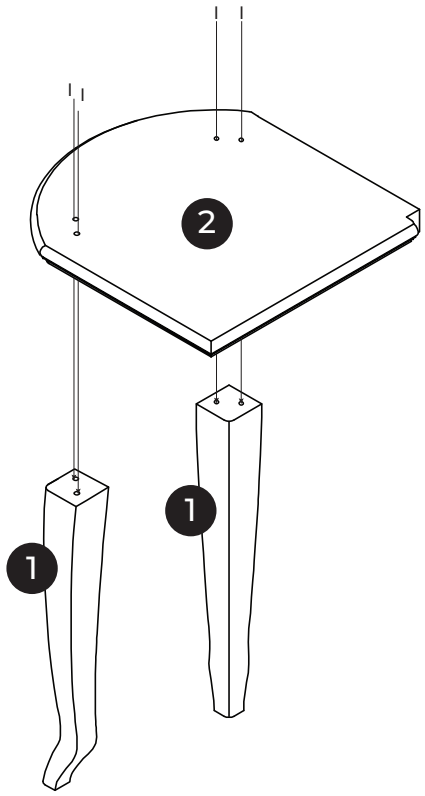

I x4

1

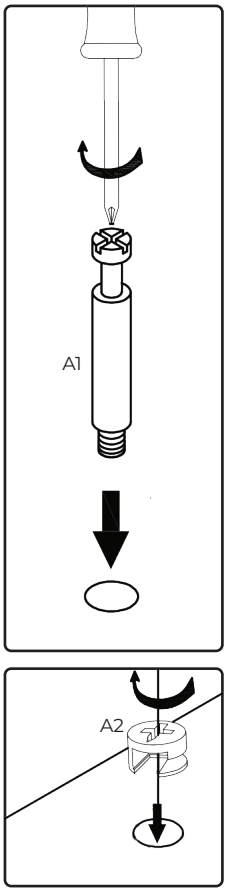

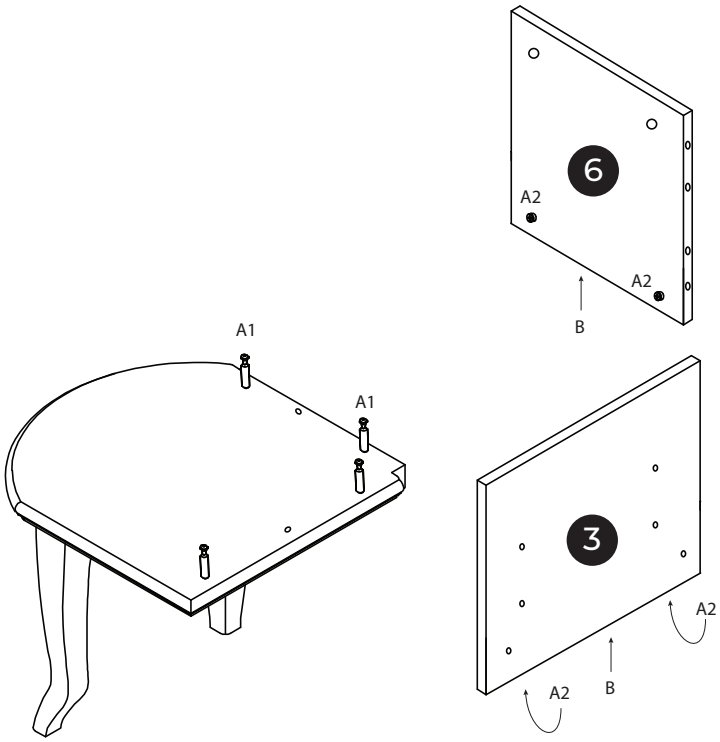

A A2 A1 x4

B x2

2

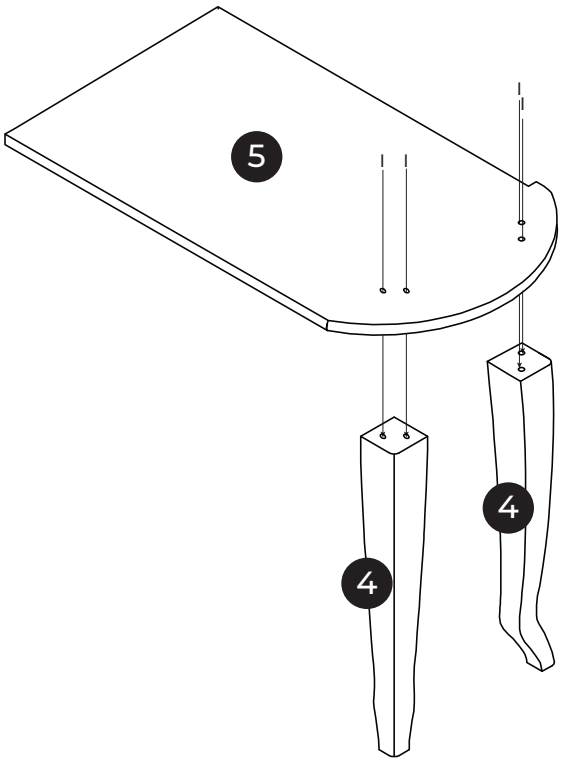

I x4	3

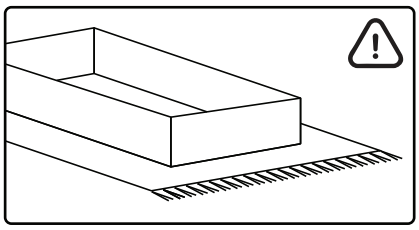

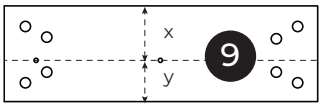

x < y

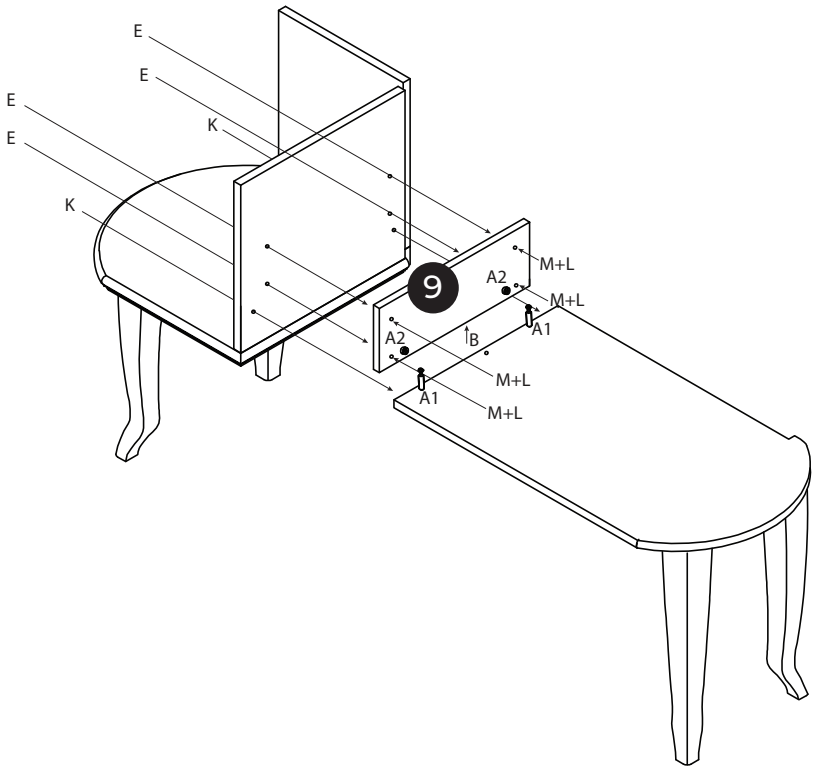

A A2 A1 x2	B x1	E x4
K x2	L x4	M x4

4

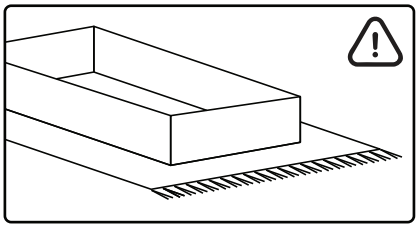

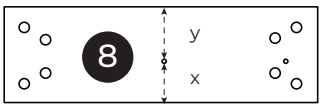

x < y

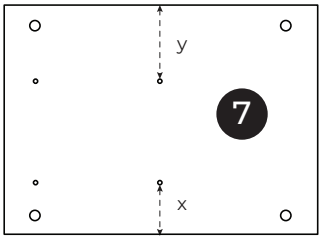

x < y

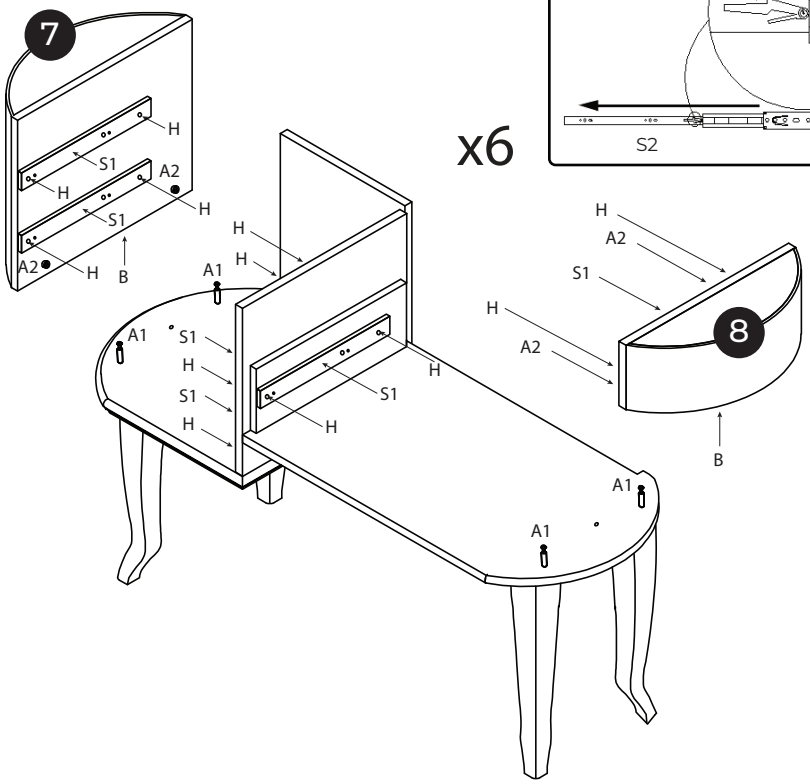

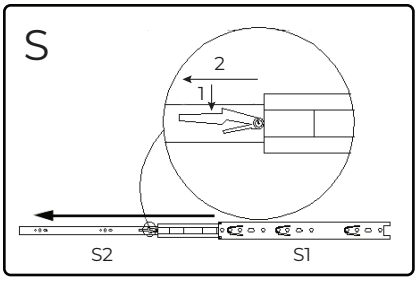

A 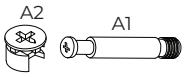 x4	B x2	H x12	S1 x6	5

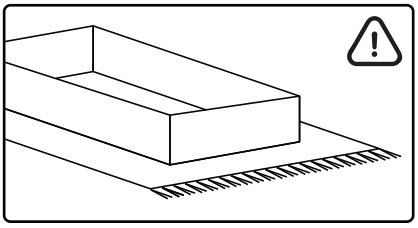

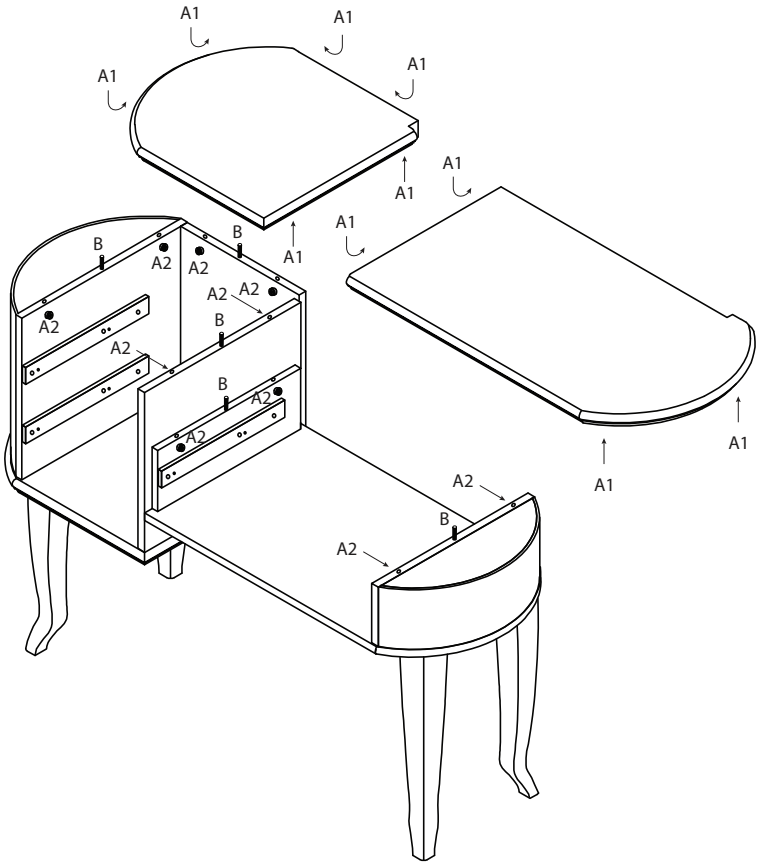

A 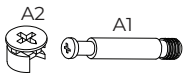 x10	B x5

6

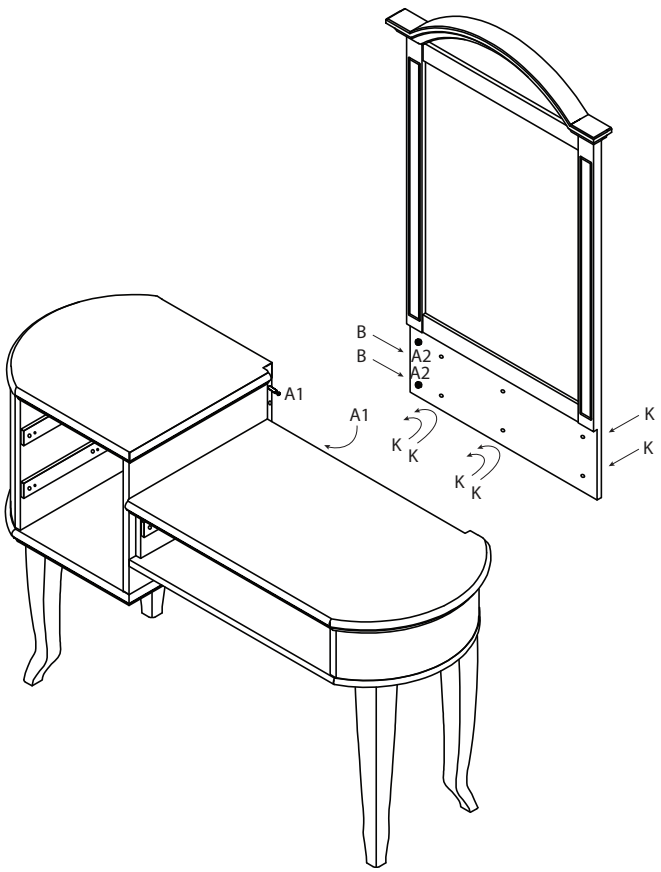

A (A2, A1) x2	B x2	K x6	7

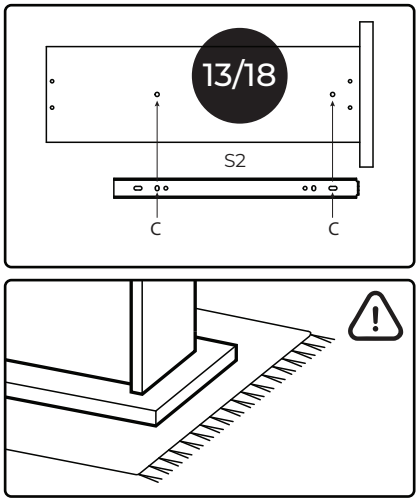

x6

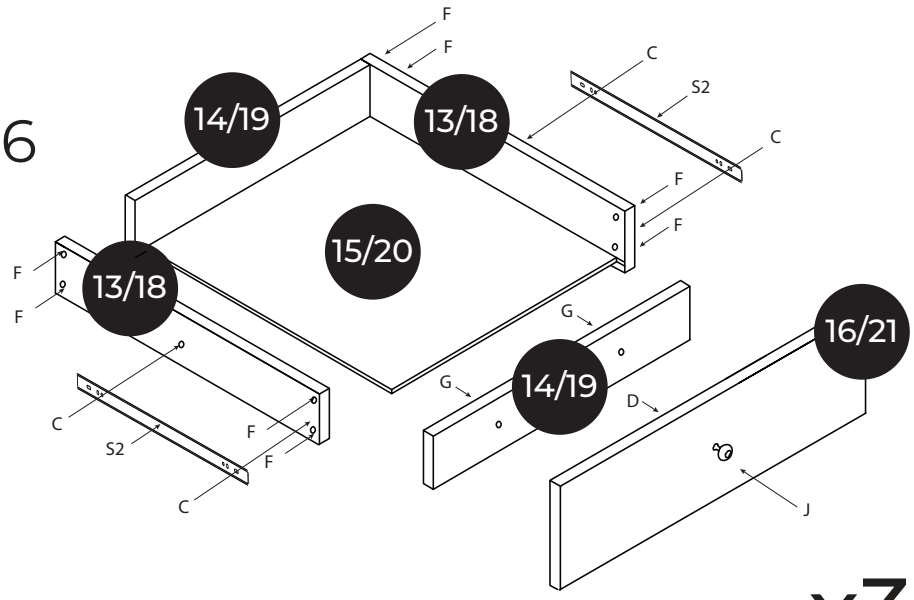

x3

C x12	D x3	F x24	
G x6	J x3	S2 x6	8

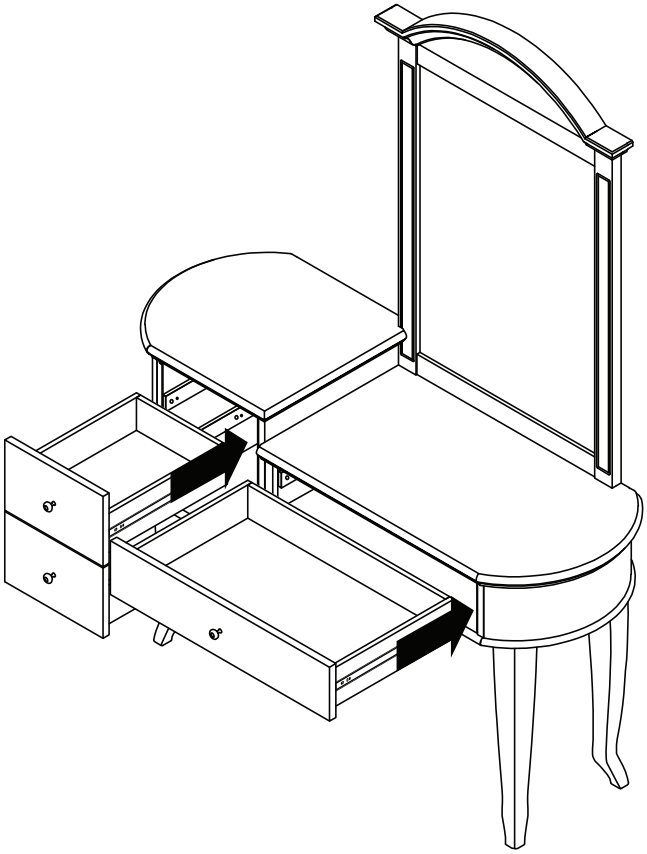

7

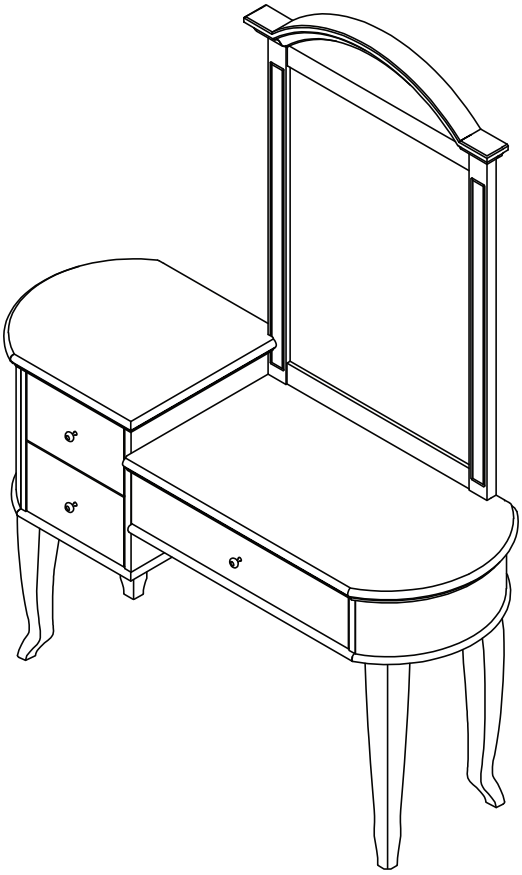

8